(c) If the piston does not pop out with compressed air, use needle-nose pliers to remove it.

(d) Using a screwdriver, remove the 2 underdrive clutch piston O-rings from the underdrive clutch piston sub-assembly.

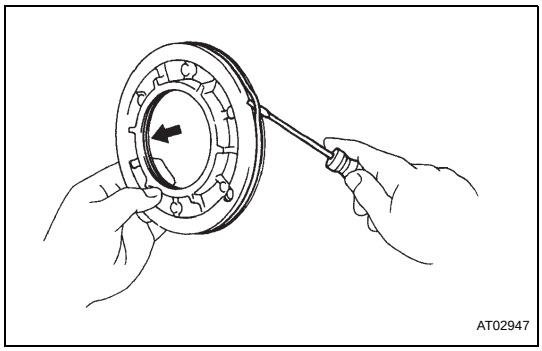

6. INSPECT UNDERDRIVE CLUTCH DISC NO.1 (See page AX-240)

7. INSPECT UNDERDRIVE CLUTCH PISTON SUB-ASSEMBLY (See page AX-240)

8. INSPECT UNDERDRIVE CLUTCH DRUM SUB-ASSEMBLY (See page AX-241)

INSPECTION

1. INSPECT UNDERDRIVE CLUTCH DISC NO.1

(a) Check if the sliding surfaces of the discs, plates and flanges are worn or burnt. If necessary, replace them.

HINT:

- If the lining of the disc is peeling off or discolored, or even if a part of the printed numbers are defaced, replace the disc.
- Before assembling new discs, soak them in ATF for at least 15 minutes.

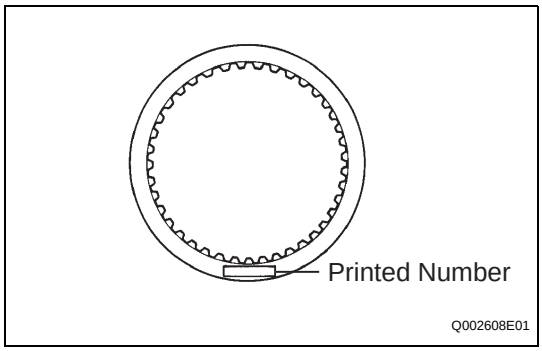

2. INSPECT UNDERDRIVE CLUTCH PISTON SUB-ASSEMBLY

(a) Check that the check ball is free by shaking the underdrive clutch piston sub-assy.

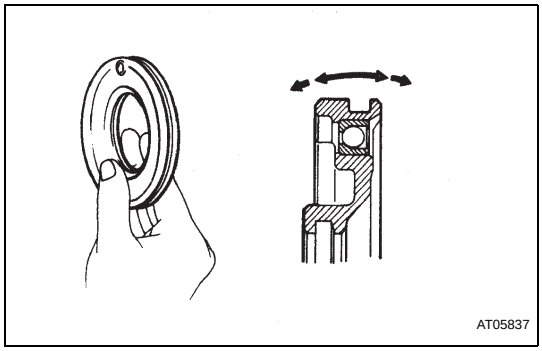

(b) Check that the valve does not leak by applying low pressure compressed air.

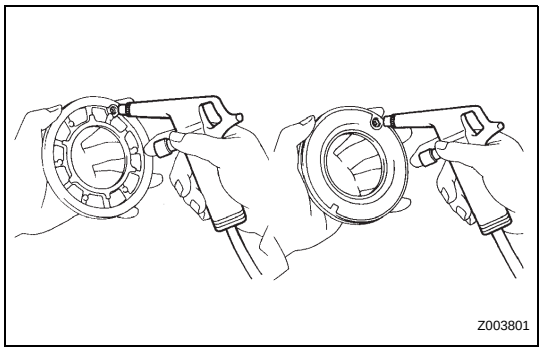

AX

cardiagn.com

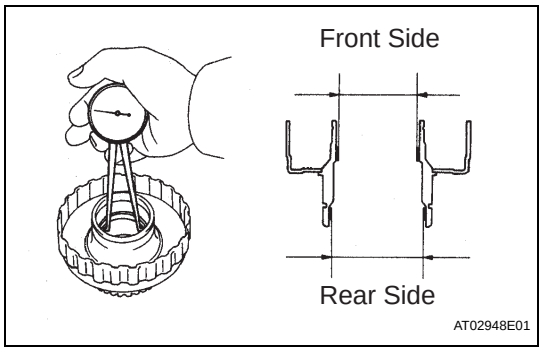

3. INSPECT UNDERDRIVE CLUTCH DRUM SUB-ASSEMBLY

(a) Using a caliper gauge, measure the bushing inside diameter of the underdrive clutch drum sub-assy.

Standard inside diameter:
Front side:
46.500 to 46.525 mm (1.83071 to 1.83169 in.)
Rear side:
55.000 to 55.030 mm (2.16535 to 2.16653 in.)
Maximum inside diameter:
Front side:
46.570 mm (1.83346 in.)
Rear side:
55.080 mm (2.16850 in.)

REASSEMBLY

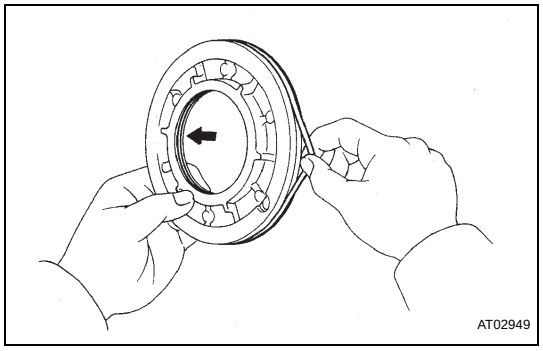

1. INSTALL UNDERDRIVE CLUTCH PISTON SUB-ASSEMBLY

(a) Coat the 2 new underdrive clutch piston O-rings with ATF and install 2 new underdrive clutch piston O-rings to the underdrive clutch piston sub-assembly.

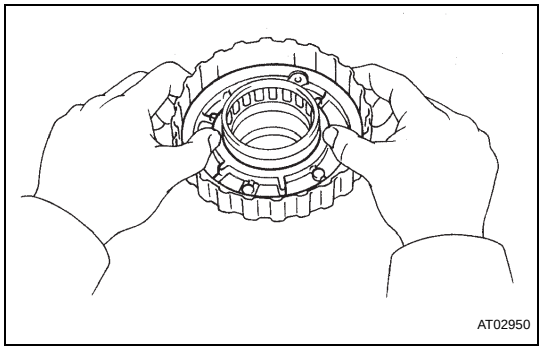

(b) Install the underdrive clutch piston sub-assembly in to the underdrive clutch drum sub-assembly.

NOTICE:
Be careful not to damage the underdrive clutch piston O- rings.

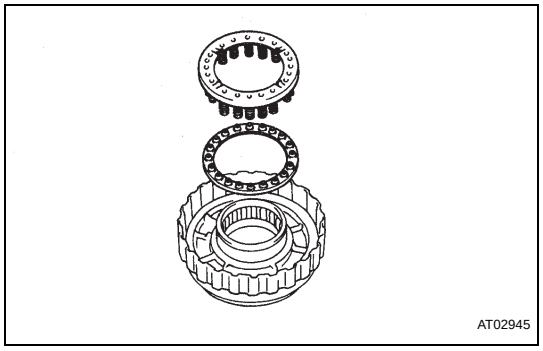

2. INSTALL UNDERDRIVE CLUTCH RETURN SPRING SUB-ASSEMBLY

(a) Install the underdrive clutch return spring plate and underdrive clutch return spring sub-assembly to the underdrive clutch drum sub-assembly.

cadiagn.com

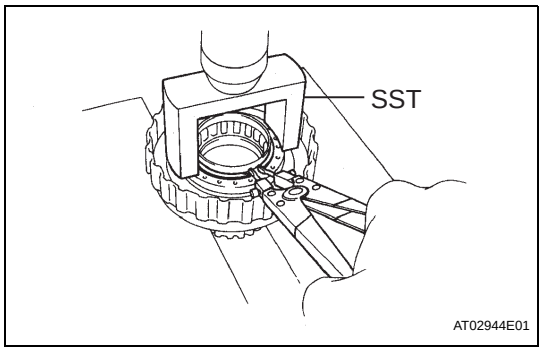

3. INSTALL UNDERDRIVE RETURN SPRING SHAFT SNAP RING

(a) Using SST and a press, compress the return spring retainer.
SST 09350-32014 (09351-32070)

(b) Using snap ring pliers, install the underdrive return spring shaft snap ring to the underdrive clutch drum sub-assembly.
SST 09350-32014 (09351-32070)

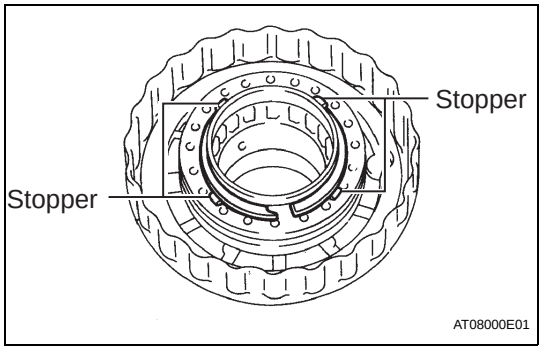

(c) Remove the SST.
HINT:
Install the snap ring, as shown.

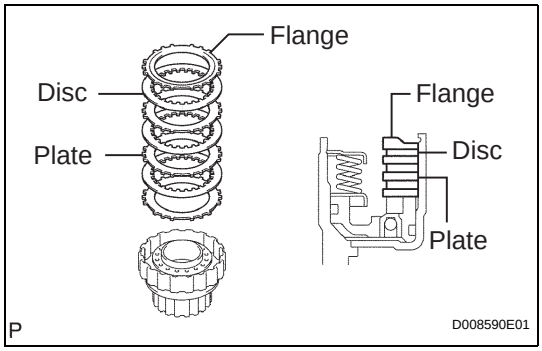

4. INSTALL UNDERDRIVE CLUTCH DISC NO.1

(a) Install the 3 plates and 3 underdrive clutch disc No.1s to the underdrive clutch drum sub-assembly.
Install in order :
F = Flange D = Disc P = Plate P - D - P - D - P - D - F

(b) Install the flange with the flat side facing downward.

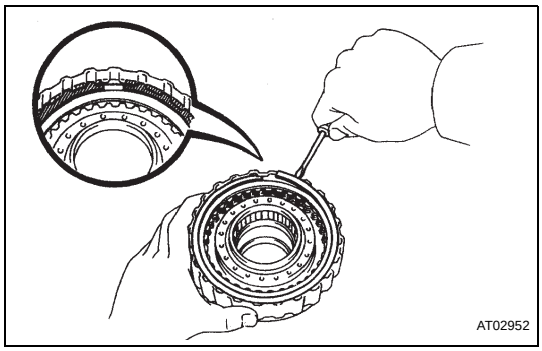

5. INSTALL UNDERDRIVE CLUTCH FLANGE NO.1 HOLE SNAP RING

(a) Using a screwdriver, install the underdrive clutch flange No.1 hole snap ring to the underdrive clutch drum sub- assembly.

AX

cardiagn.com